ISO★STAR Solenoid and pilot actuated spool valves

Sub-base 5/2 and 5/3, ISO #1 to ISO #3

Specially coated glandless spool and sleeve for extreamly long life

Available with integral flow regulators on ISO #1 and #2 sizes

Low power solenoids and manual override as standard

Wide range of sub-bases and accessories

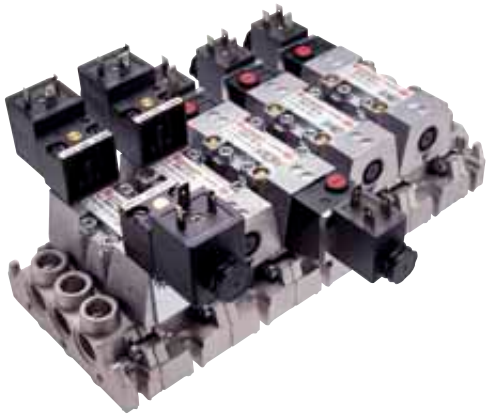

TECHNICAL DATA

Medium:

Compressed air, 40 µm filtered, lubricated or non-lubricated

Operation:

Maximum 16 bar, see table for individual details

Flow:

ISO #1 – 1230 l/min, ISO #2 – 2450 l/min, ISO #3 – 4400 l/min

Ambient temperature:

–15°C to +50°C solenoid models, -15°C to +80°C pilot models

Consult our Technical Service for use below +2°C

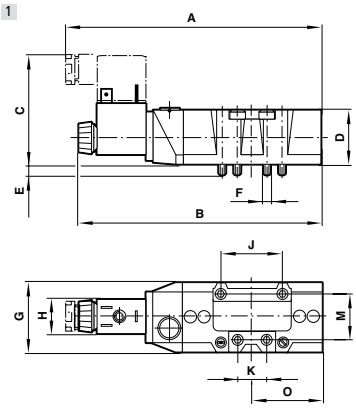

EXPRESS LINKS

For ISO #4 Valves...

Please see UM/22000 range

See Page 101

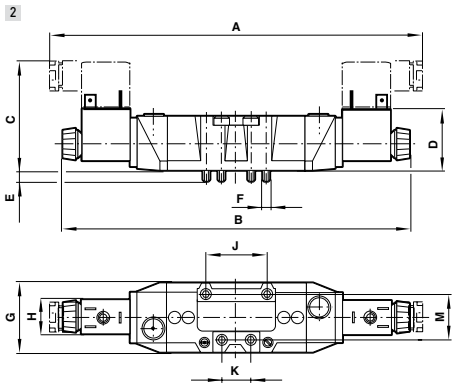

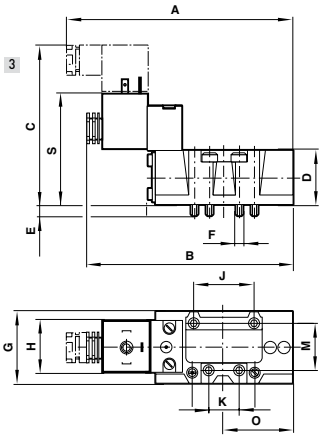

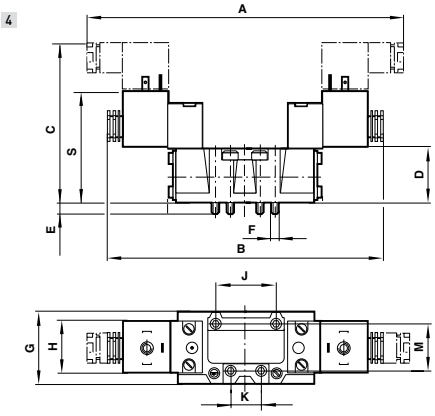

Dimensions

Model	ISO size	A	B	C	D	E	F	G	H	J	K	M	O	Drawing No.
SXE 9573-A...	1	153	144	65	33	7,5	M5	42	22	36	18	28	42	1
SXE 9574-A...	2	181	173	71	42	8	M6	55	22	48	24	38	53	1
SXE 9575-A...	3	207,5	197	72	43	11,5	M8	62,5	22	64	32	48	65,5	1

Model	ISO size	A	B	C	D	E	F	G	H	J	K	M	O	Drawing No.
SXE 9573-Z...	1	137,5	128	99,5	33	7,5	M5	42	30	36	18	28	42	3
SXE 9574-Z...	2	157	147	107	42	8	M6	55	30	48	24	38	53	3
SXE 9575-Z...	3	181	171	108,5	43	11,5	M8	62,5	30	64	32	48	65,5	3

Model	ISO size	A	B	C	D	E	F	G	H	J	K	M	Drawing No.
SXE 0573-A...	1	222	204	65	33	7,5	M5	42	22	36	18	28	2
SXE 9*73-A...													
SXE 0574-A...	2	255	239	71	42	8	M6	55	22	48	24	38	2
SXE 9*74-A...													
SXE 0575-A...	3	284	263	72	43	11,5	M8	62,5	22	64	32	48	2
SXE 9*75-A...													

Model	ISO size	A	B	C	D	E	F	G	H	J	K	M	Drawing No.
SXE 0573-Z...	1	191	171,5	99,5	33	7,5	M5	42	30	36	18	28	4
SXE 9*73-Z...													
SXE 0574-Z...	2	208	189	107	42	8	M6	55	30	48	24	38	4
SXE 9*74-Z...													
SXE 0575-Z...	3	181	171	108,5	43	11,5	M8	62,5	30	64	32	48	4
SXE 9*75-Z...													

PDF CAD

For further information
www.norgren.com/info/nec/en098

ISO★STAR Solenoid and pilot actuated spool valves

Sub-base 5/2 and 5/3, ISO #1 to ISO #3

Models – 22mm Coil, Industrial Standard

Accessories

5/2 VALVES – SOLENOID ACTUATED, INTERNAL PILOT SUPPLY

24 DC Push locakble M/O Model	220 AC Push lockable M/O Model	Actuation	Size	Flow (l/min)	Operating pressure (bar)	Drawing No.	Basic plug
SXE9573-A81-00/13J	SXE9573-A81-00/19J	Sol/Spring	ISO 1	1230	1,8..10	1	M/P19063
SXE9574-A81-00/13J	SXE9574-A81-00/19J	Sol/Spring	ISO 2	2450	1,8..10	1	M/P19063
SXE9575-A71-00/13J	SXE9575-A71-00/19J	Sol/Spring	ISO 3	4400	1,8..10	1	M/P19063
SXE9573-A80-00/13J	SXE9573-A80-00/19J	Sol/Air spring	ISO 1	1230	1..10	1	M/P19063
SXE9574-A80-00/13J	SXE9574-A80-00/19J	Sol/Air spring	ISO 2	2450	1..10	1	M/P19063
SXE9575-A70-00/13J	SXE9575-A70-00/19J	Sol/Air spring	ISO 3	4400	1..10	1	M/P19063
SXE0573-A60-00/13J	SXE0573-A60-00/19J	Sol/Sol	ISO 1	1230	2..10	2	M/P19063
SXE0574-A60-00/13J	SXE0574-A60-00/19J	Sol/Sol	ISO 2	2450	2..10	2	M/P19063
SXE0575-A50-00/13J	SXE0575-A50-00/19J	Sol/Sol	ISO 3	4400	2..10	2	M/P19063

5/3 VALVES – SOLENOID ACTUATED, INTERNAL PILOT SUPPLY

24 DC Push lockable M/O Model	220 AC Push lockable M/O Model	Actuation	Size	Flow (l/min)	Operating pressure (bar)	Drawing No.	Basic plug
SXE9673-A60-00/13J	SXE9673-A60-00/19J	Sol/Sol APB	ISO 1	1230	2..10	2	M/P19063
SXE9674-A60-00/13J	SXE9674-A60-00/19J	Sol/Sol APB	ISO 2	2450	2..10	2	M/P19063
SXE9675-A50-00/13J	SXE9675-A50-00/19J	Sol/Sol APB	ISO 3	4400	2..10	2	M/P19063
SXE9773-A60-00/13J	SXE9773-A60-00/19J	Sol/Sol COE	ISO 1	1230	2..10	2	M/P19063
SXE9774-A60-00/13J	SXE9774-A60-00/19J	Sol/Sol COE	ISO 2	2450	2..10	2	M/P19063
SXE9775-A50-00/13J	SXE9775-A50-00/19J	Sol/Sol COE	ISO 3	4400	2..10	2	M/P19063
SXE9873-A60-00/13J	SXE9873-A60-00/19J	Sol/Sol COP	ISO 1	1230	2..10	2	M/P19063
SXE9874-A60-00/13J	SXE9874-A60-00/19J	Sol/Sol COP	ISO 2	2450	2..10	2	M/P19063
SXE9875-A50-00/13J	SXE9875-A50-00/19J	Sol/Sol COP	ISO 3	4400	2..10	2	M/P19063

APB = All Ports Blocked, COE = Centre Open Exhaust, COP = Centre Open Pressure.
Note: ISO 1 and 2 with integral flow regulators

Models – 30mm Coil, CNOMO

5/2 VALVES – SOLENOID ACTUATED, INTERNAL PILOT SUPPLY

24 DC Push only M/O Model	220 AC Push only M/O Model	Actuation	Size	Flow (l/min)	Operating pressure (bar)	Drawing No.	Basic plug
SXE9573-Z71-81/33N	SXE9573-Z71-81/89N	Sol/Spring	ISO 1	1230	1,8..16	3	M/P15737
SXE9574-Z71-81/33N	SXE9574-Z71-81/89N	Sol/Spring	ISO 2	2450	1,8..16	3	M/P15737
SXE9575-Z71-81/33N	SXE9575-Z71-81/89N	Sol/Spring	ISO 3	4400	1,8..16	3	M/P15737
SXE9573-Z70-81/33N	SXE9573-Z70-81/89N	Sol/Air spring	ISO 1	1230	1..16	3	M/P15737
SXE9574-Z70-81/33N	SXE9574-Z70-81/89N	Sol/Air spring	ISO 2	2450	1..16	3	M/P15737
SXE9575-Z70-81/33N	SXE9575-Z70-81/89N	Sol/Air spring	ISO 3	4400	1..16	3	M/P15737
SXE0573-Z50-81/33N	SXE0573-Z50-81/89N	Sol/Sol	ISO 1	1230	2..16	4	M/P15737
SXE0574-Z50-81/33N	SXE0574-Z50-81/89N	Sol/Sol	ISO 2	2450	2..16	4	M/P15737
SXE0575-Z50-81/33N	SXE0575-Z50-81/89N	Sol/Sol	ISO 3	4400	2..16	4	M/P15737

Other models, voltages and manual override options available. Please call your Express Team.

ISO★STAR Solenoid and pilot actuated spool valves

Sub-base 5/2 and 5/3, ISO #1 to ISO #3

Models – 30mm Coil, CNOMO

Accessories

5/3 VALVES – SOLENOID ACTUATED, INTERNAL PILOT SUPPLY 24 DC Push only M/O Model	220 AC Push only M/O Model	Actuation	Size	Flow (l/min)	Operating pressure (bar)	Drawing No.	Basic plug
SXE9673-Z50-81/33N	SXE9673-Z50-81/89N	Sol/Sol APB	ISO 1	1230	2..16	4	M/P15737
SXE9674-Z50-81/33N	SXE9674-Z50-81/89N	Sol/Sol APB	ISO 2	2450	2..16	4	M/P15737
SXE9675-Z50-81/33N	SXE9675-Z50-81/89N	Sol/Sol APB	ISO 3	4400	2..16	4	M/P15737
SXE9773-Z50-81/33N	SXE9773-Z50-81/89N	Sol/Sol COE	ISO 1	1230	2..16	4	M/P15737
SXE9774-Z50-81/33N	SXE9774-Z50-81/89N	Sol/Sol COE	ISO 2	2450	2..16	4	M/P15737
SXE9775-Z50-81/33N	SXE9775-Z50-81/89N	Sol/Sol COE	ISO 3	4400	2..16	4	M/P15737
SXE9873-Z50-81/33N	SXE9873-Z50-81/89N	Sol/Sol COP	ISO 1	1230	2..16	4	M/P15737
SXE9874-Z50-81/33N	SXE9874-Z50-81/89N	Sol/Sol COP	ISO 2	2450	2..16	4	M/P15737
SXE9875-Z50-81/33N	SXE9875-Z50-81/89N	Sol/Sol COP	ISO 3	4400	2..16	4	M/P15737

APB = All Ports Blocked, COE = Centre Open Exhaust, COP = Centre Open Pressure.

Voltage codes and spare coils for 10 bar models

Voltage	22 mm Coil with connector interface acc. to Industrial Standard			22 mm Coil with connector interface acc. to DIN 43 650, table B			30 mm Coil with connector interface acc. to DIN 43 650, table A		
	Model	Code	Power inrush/hold	Model	Code	Power inrush/hold	Model	Code	Power inrush/hold
24 V d.c.	QM/48/13J/21	13J	2 W	V10626-A13L	13L	2 W	V10633-A23N	23N	1,5 W
220/240 V a.c. 50/60 Hz	QM/48/19J/21	19J	9/5 VA	V10626-A19L	19L	9/5 VA	V10633-A29N	29N	3/2 VA

Other voltages available, please call your Express Team.

Voltage codes and spare coils for 16 bar models, (CNOMO only)

Voltage	30 mm Coil with connector interface acc. to DIN 43 650, table A		
	Model	Code	Power inrush/hold
24 V d.c.	V10633-A33N	33N	4 W
220/240 V a.c. 50/60 Hz	V10633-A89N	89N	10/8 VA

Other voltages available, please call your Express Team.

EXPRESS LINKS

Exhaust air...

Can be noisy and dangerous to ears, always fit a silencer.

Please see page 275

Models – Air Pilot Actuated

5/2 VALVES Model	Actuation	Size	Flow (l/min)	Operating pressure (bar)
SXP9573-180-00	Air/Spring	ISO 1	1230	-0,9..16
SXP9574-180-00	Air/Spring	ISO 2	2450	-0,9..16
SXP9575-170-00	Air/Spring	ISO 3	4400	-0,9..16
SXP0573-180-00	Air/Air	ISO 1	1230	-0,9..16
SXP0574-180-00	Air/Air	ISO 2	2450	-0,9..16
SXP0575-170-00	Air/Air	ISO 3	4400	-0,9..16

Note: ISO 1 and 2 with integral flow regulators.
APB = All Ports Blocked, COE = Centre Open Exhaust, COP = Centre Open Pressure.

5/3 VALVES Model	Actuation	Size	Flow (l/min)	Operating pressure (bar)
SXP9673-180-00	Air/Air APB	ISO 1	1230	-0,9..16
SXP9674-180-00	Air/Air APB	ISO 2	2450	-0,9..16
SXP9675-170-00	Air/Air APB	ISO 3	4400	-0,9..16
SXP9773-180-00	Air/Air COE	ISO 1	1230	-0,9..16
SXP9774-180-00	Air/Air COE	ISO 2	2450	-0,9..16
SXP9775-170-00	Air/Air COE	ISO 3	4400	-0,9..16
SXP9873-180-00	Air/Air COP	ISO 1	1230	-0,9..16
SXP9874-180-00	Air/Air COP	ISO 2	2450	-0,9..16
SXP9875-170-00	Air/Air COP	ISO 3	4400	-0,9..16